ZUCCHETTI.

Aguablu Hob Mount Bath Set

ZA5470

WELS: 3 stars

Litres/minute: 9L (handshower only)

WELS License/Reg. No: 0023 / S03180

Finish: Chrome

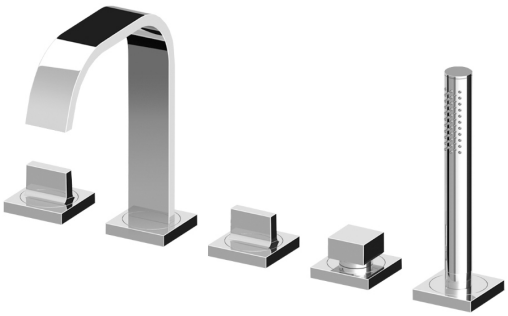

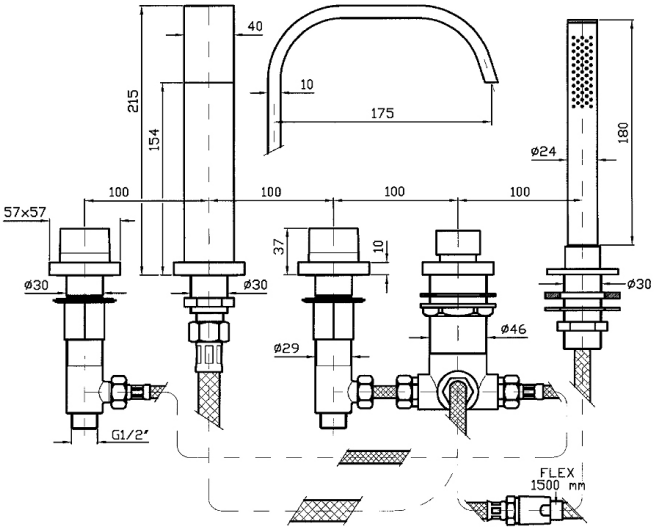

The Aguablu hob mount bath set has rigorously geometrical clean refined forms by Barbara Sordina. Each piece combines technology, design and poetry, denoting an intense, non-conventional object, with a strong personality, capable of enhancing the beauty of contemporary-style bathrooms. Aguablu's spout has a rectangular section that lets water flow freely, recalling the cascade effect of a natural waterfall reproduced with all its pleasant effects inside your home.

The Aguablu hob mount bath set features 1/2 turn ceramic disc spindles and unique flush mount handles with 1500mm flexible hose. Spout projection of 175mm.

WARRANTY
15 years

*Conditions apply.

Dimensions are in millimeters and are subject to manufacturing variations. Streamline reserves the right to vary specifications at any time without notice. Information provided within this specification sheet is correct at the date of printing. Please confirm all particulars with your sales consultant prior to purchase.

Version: 1.1 - May 2019