ARCISAN

Axus Pin wall mount basin /bath mixer lever up - 220mm spout

AX28225 - EXTERNAL PART ONLY

WELS: 6 star

Litre/min: 4.5L

WELS License / Reg No: 1483 / T33790

Finishes available:

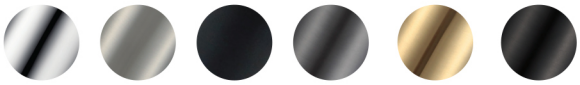

Chrome | Brushed Nickel^ (.SN) | Matte Black (.MB) | Brushed Gun Metal^ (.GM) | Brushed Brass^ (.BB) | Brushed Iron^ (.BI)

^ PVD finish

INFORMATION

Pressure Rating
150 - 500kPa

Hot and cold water inlet pressures should be equal.

CARE AND MAINTENANCE

- All surfaces should be frequent cleaned with a mixture of mild, pH neutral soap and warm water with a soft cloth
- Do not use abrasive clothes, scouring pads on surfaces
- Do not use harsh cleaning agents i.e. cream cleaners or citrus based cleaners *(see cleaning leaflet for comprehesive list)*

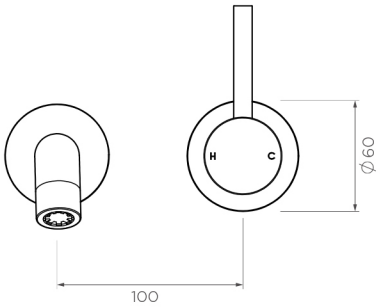

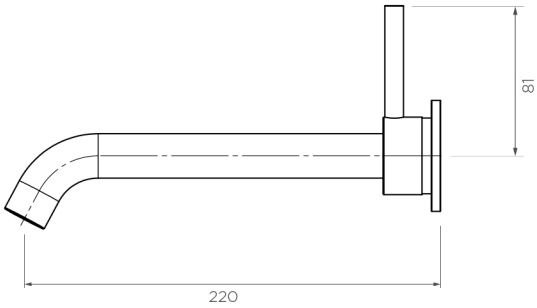

WARRANTY
15 years
*Conditions apply.

Requires ARB0120U - Arcisan Universal in-wall body for installation.

streamline

www.streamlineproducts.com.au | Ph: 1300 735 352

Dimensions are in millimeters and are subject to manufacturing variations. Streamline Products reserves the right to vary specifications at any time without notice. Information provided within this specification sheet is correct at the date of printing. Please confirm all particulars with your sales consultant prior to purchase.
Version: 1.0 - April 2023